L'TR	REVISION	DATE	BY	E.C.O.
*	ORIGINAL ISSUE	01/07/2025	KAD	2398

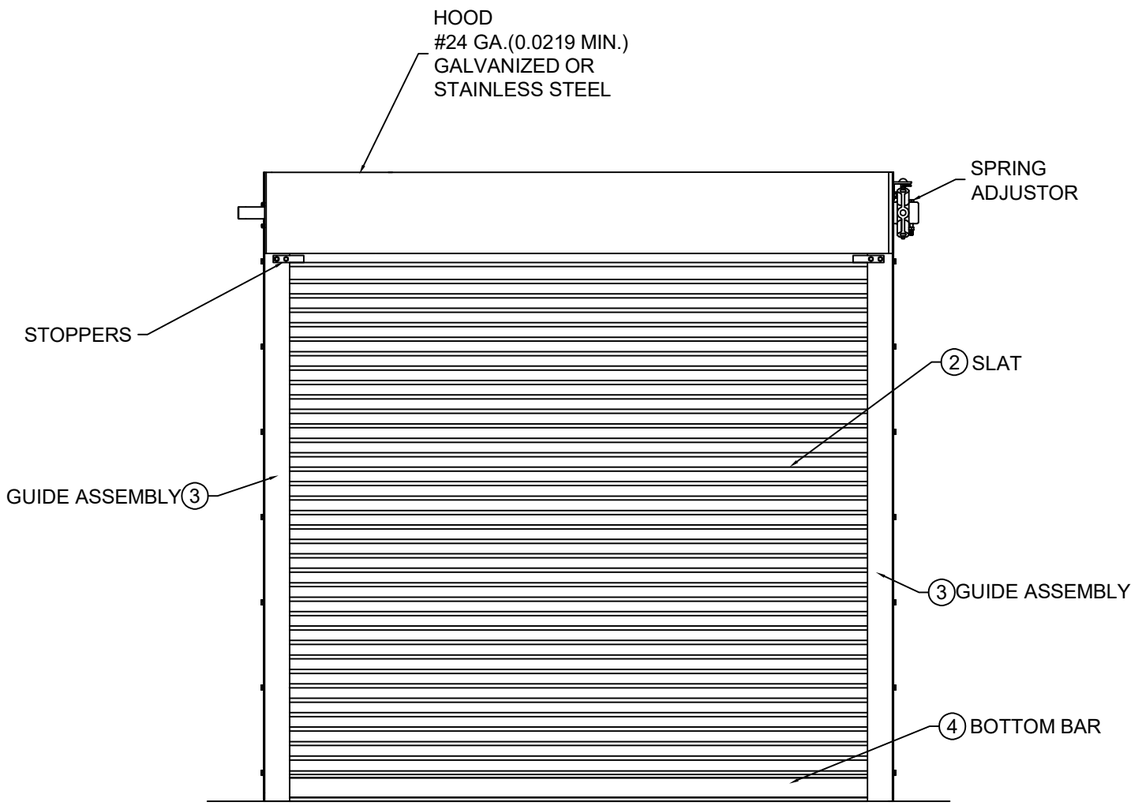

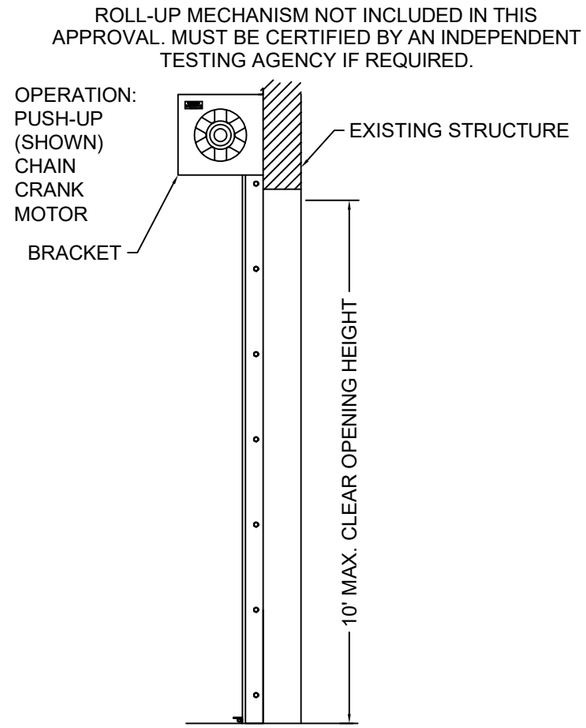

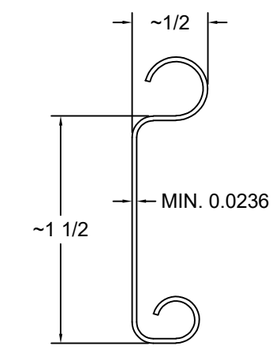

2 SLAT DETAIL
TYPICAL SECTION
ASTM A653 HSLAS TYPE B GRADE 40 G40 OR
ASTM A653 HSLAS TYPE A GRADE 40 G40 OR
ASTM A653 STRUCTURAL STEEL GRADE 40 G40
OR TYPE 304 STAINLESS STEEL (MIN. YIELD 40,000 psi)
OR TYPE 316 STAINLESS STEEL (MIN. YIELD 40,000 psi)
OR TYPE 430 STAINLESS STEEL (MIN. YIELD 40,000 psi)
OR TYPE 201 STAINLESS STEEL (MIN. YIELD 40,000 psi)
FULL SCALE

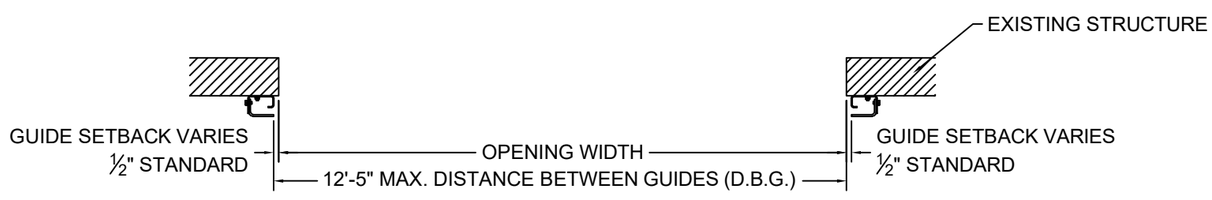

1 OVERALL DOOR ASSEMBLY
1:16 SCALE

SHAWN PATRICK KELLY
LICENSE
No 58299
STATE OF FLORIDA
PROFESSIONAL ENGINEER

Shawn Kelley

Digitally signed by Shawn Kelley
Date: 2026.02.11 12:06:43 -05'00'

Clopay

CLOPAY CORPORATION
8585 DUKE BOULEVARD
MASON, OH 45040

P: 800.225.6729
F: 513.440.4853

Unless otherwise specified, dimensions are in inches & tolerances are:

0.000 = +/- 0.031
FRACTIONAL = +/- 1/32
ANGLES = +/- 1/2 DEG

TITLE: WIND LOAD CONFIGURATION
ROLLING STEEL COUNTER DOOR
CP0005 SLAT IMPACT RATED

DRAWN BY:	SIZE:	SCALE:	SHEET:
KAD	B	AS NOTED	1/5

DWG NO: ES-16-132-CLO

REVIEWED FOR SPECIFIED DOOR COMPONENTS ONLY, EXISTING STRUCTURE NOT ANALYZED

L'TR	REVISION	DATE	BY	E.C.O.
*	ORIGINAL ISSUE	01/07/2025	KAD	2398

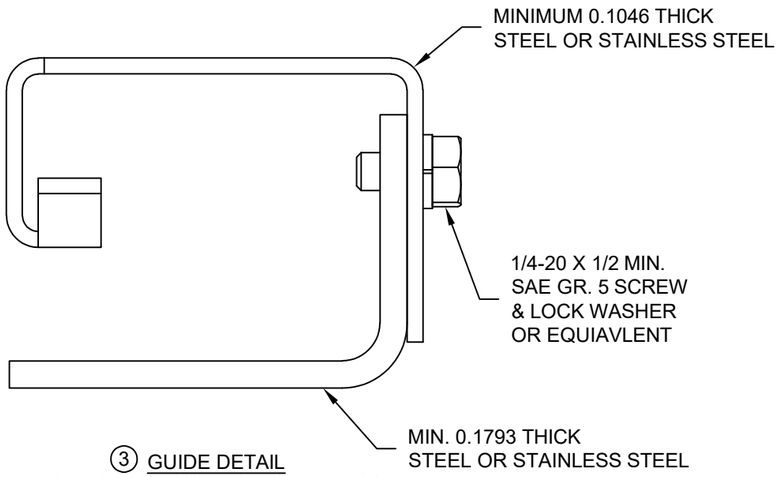

③ GUIDE DETAIL
ASTM A1011 CS TYPE B STEEL OR
TYPE 304 STAINLESS STEEL OR
TYPE 316 STAINLESS STEEL

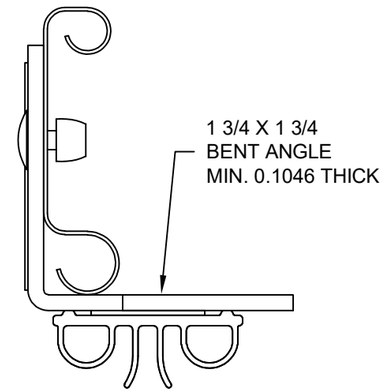

④ BENT ANGULAR BOTTOM BAR DETAIL
ASTM A1011 CS TYPE B STEEL OR
TYPE 304 STAINLESS STEEL OR
TYPE 316 STAINLESS STEEL

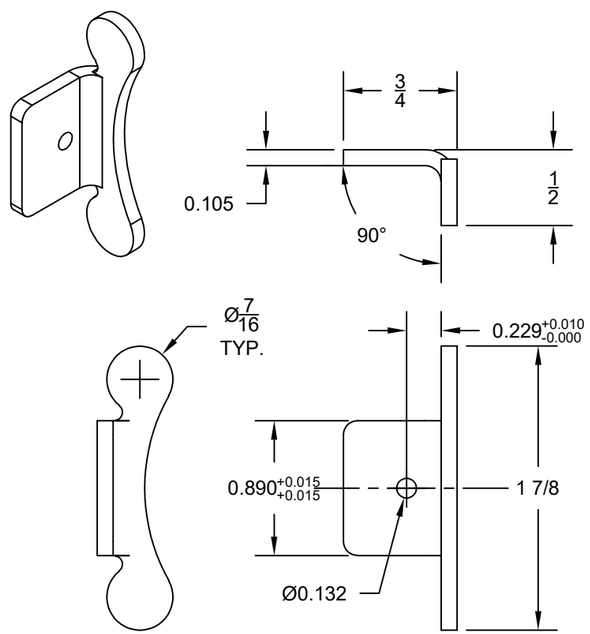

⑤ ENDLOCK DETAIL
ASTM A1011 CS TYPE B STEEL OR
ASTM A1008 TYPE B STEEL
GALVANIZED IN ACCORDANCE WITH
ASTM A123, G90 ZINC COATING
OR TYPE 304 STAINLESS STEEL OR
TYPE 316 STAINLESS STEEL

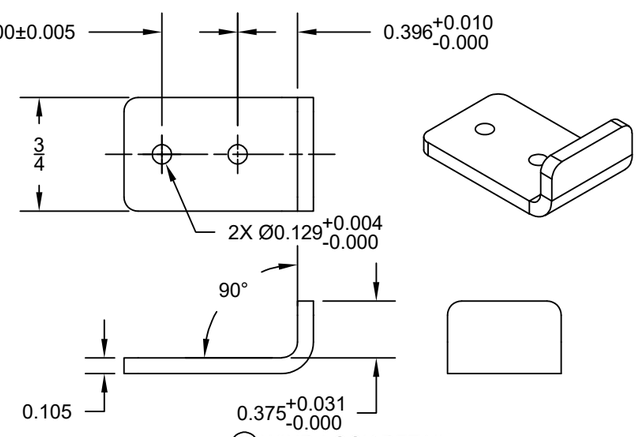

⑥ WIND-LOCK DETAIL
ASTM A1011 CS TYPE B STEEL OR
ASTM A1008 TYPE B STEEL
GALVANIZED IN ACCORDANCE WITH ASTM A123, G90 ZINC COATING
OR TYPE 304 STAINLESS STEEL OR
TYPE 316 STAINLESS STEEL

GENERAL NOTES:

1. THESE PRODUCT EVALUATION DOCUMENTS REPRESENT A ROLL-UP DOOR ASSEMBLY DESIGNED AND TESTED IN ACCORDANCE WITH THE STANDARD BUILDING CODE, THE INTERNATIONAL BUILDING CODE, AND THE FLORIDA BUILDING CODE.

2. THIS ROLL-UP DOOR HAS BEEN TESTED FOR UNIFORM STATIC PRESSURE, IMPACT AND FATIGUE RESISTANCE IN ACCORDANCE WITH THE FBC TEST PROTOCOLS FOR HIGH VELOCITY HURRICANE ZONES TAS 201, TAS 202, AND TAS 203.

3. ANALYSIS OF FASTENERS AND COMPONENTS IS BASED ON A MAXIMUM 40 PSF DESIGN WIND PRESSURE AND APPLICABLE TESTED LOADING CONDITIONS, AS NOTED.

4. A 33% INCREASE IN ALLOWABLE STRESS HAS NOT BEEN USED IN THE DESIGN OF THIS PRODUCT.

5. DETERMINE THE POSITIVE AND NEGATIVE DESIGN LOADS TO USE WHEN REFERENCING THESE DOCUMENTS IN ACCORDANCE WITH THE GOVERNING CODE AND GOVERNING WIND VELOCITY.

6. THESE PRODUCT EVALUATION DOCUMENTS ARE PREPARED BY THE PRODUCT ENGINEER AND ARE GENERIC. THEY DO NOT INCLUDE INFORMATION PREPARED FOR A SPECIFIC SITE.

7. THESE PRODUCT EVALUATION DOCUMENTS ARE NOT VALID FOR PERMIT WITHOUT ORIGINAL SIGNATURE, DATE AND EMBOSSED SEAL ON EACH PERMIT COPY, WHETHER OR NOT A MASTER APPROVAL DOCUMENT IS ON FILE WITH A MUNICIPALITY OR OTHER GOVERNING AGENCY.

8. THESE PRODUCT EVALUATION DOCUMENTS ARE SUITABLE TO BE APPLIED BY THE CONTRACTOR PROVIDED THE CONTRACTOR DOES NOT DEVIATE FROM THE CONDITIONS DETAILED HEREIN AND THE CONTRACTOR VERIFIES THE EXISTING STRUCTURE IS CAPABLE OF SUPPORTING THE SUPERIMPOSED LOADS Vx & Vy ON THE JAMBS OF THE DOOR.

9. ALTERATIONS OR ADDITIONS TO THIS DOCUMENT ARE NOT PERMITTED.

10. WHEN THE SITE CONDITIONS DEVIATE FROM THESE PRODUCT EVALUATION DOCUMENTS, SITE SPECIFIC DOCUMENTS SHALL BE PREPARED BY A FULLY LICENSED AND REGISTERED ENGINEER OR ARCHITECT.

11. IF THE DEVIATING SITE SPECIFIC DOCUMENTS ARE PREPARED BY A DELEGATED REGISTERED ENGINEER OR ARCHITECT, SAID DOCUMENTS SHALL BEAR THE DATE, SIGNATURE, AND EMBOSSED SEAL OF THE DELEGATED ENGINEER OR ARCHITECT AND SHALL BE SUBMITTED TO THE PROJECT ENGINEER FOR REVIEW.

12. ALL BOLTS AND WASHERS SHALL BE GALVANIZED STEEL OR STAINLESS STEEL WITH A MINIMUM TENSILE STRENGTH OF 60 K.S.I.

13. ALL WINDLOCK RIVETS SHALL BE 1/8" RIVETS IFI GRADE 30, 50, or 51 WITH A MINIMUM TENSILE STRENGTH OF 425 Lbs., AND SHEAR STRENGTH OF 295 Lbs., U.O.N.. RIVETS TO BE INSTALLED IN ALL WINDLOCK HOLES.

14. ALL WELDING SHALL BE PERFORMED BY QUALIFIED WELDERS IN ACCORDANCE WITH A.W.S. SPECIFICATIONS, LATEST EDITION. ALL WELDING ELECTRODES SHALL CONFORM TO A.W.S. A5.1 GRADE E-70. MINIMUM WELDING PROCESSES SHALL BE ARC WELDING A.W.S. E7014 OR MIG WELDING A.W.S. ER70S-6.

15. ANCHOR NOTES:

A. EMBEDMENT LENGTH DOES NOT INCLUDE STUCCO FINISH.

B. ANCHORS SHALL BE INSTALLED IN ACCORDANCE WITH MANUFACTURERS SPECIFICATIONS.

16. DOOR MAY BE INSTALLED ON THE INSIDE OR OUTSIDE OF AN EXTERIOR WALL

CLOPAY CORPORATION
8585 DUKE BOULEVARD
MASON, OH 45040

P: 800.225.6729
F: 513.440.4853

Unless otherwise specified, dimensions are in inches & tolerances are:

0.000 = +/- 0.031
FRACTIONAL = +/- 1/32
ANGLES = +/- 1/2 DEG

TITLE: WIND LOAD CONFIGURATION
ROLLING STEEL COUNTER DOOR
CP0005 SLAT IMPACT RATED

DRAWN BY:	SIZE:	SCALE:	SHEET:
KAD	B	AS NOTED	2/5

DWG NO: ES-16-132-CLO

REVIEWED FOR SPECIFIED DOOR COMPONENTS ONLY, EXISTING STRUCTURE NOT ANALYZED

L'TR	REVISION	DATE	BY	E.C.O.
*	ORIGINAL ISSUE	01/07/2025	KAD	2398

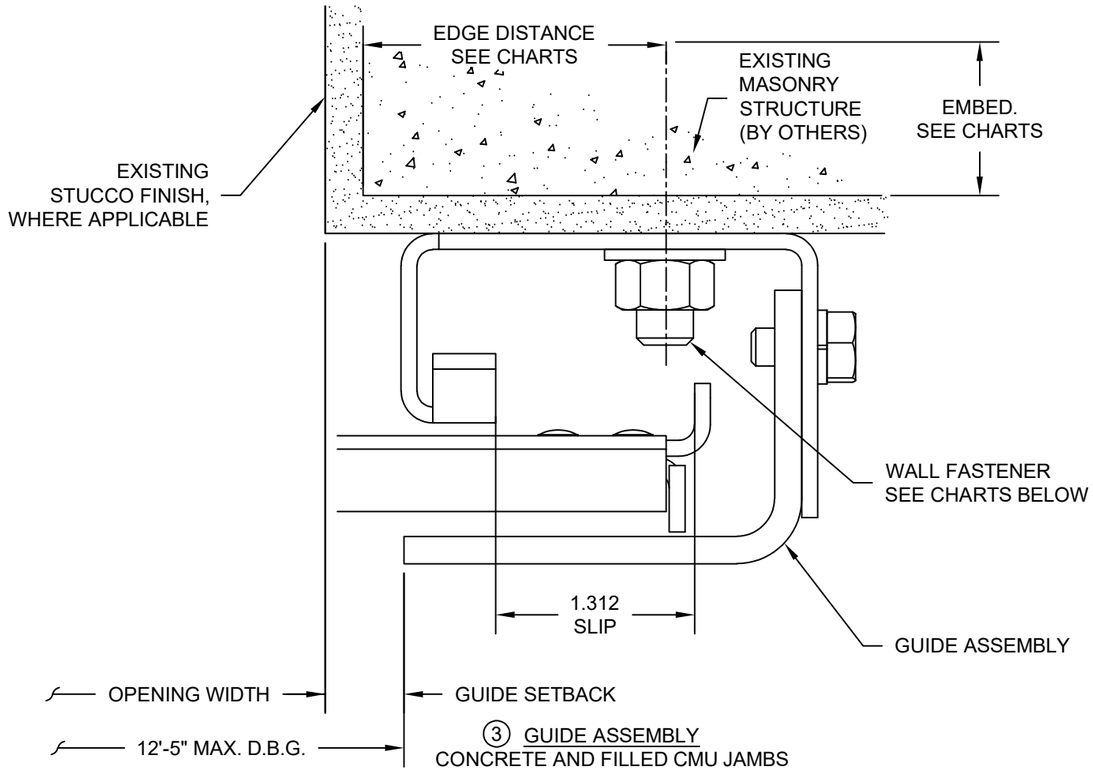

3 GUIDE ASSEMBLY
CONCRETE AND FILLED CMU JAMBS

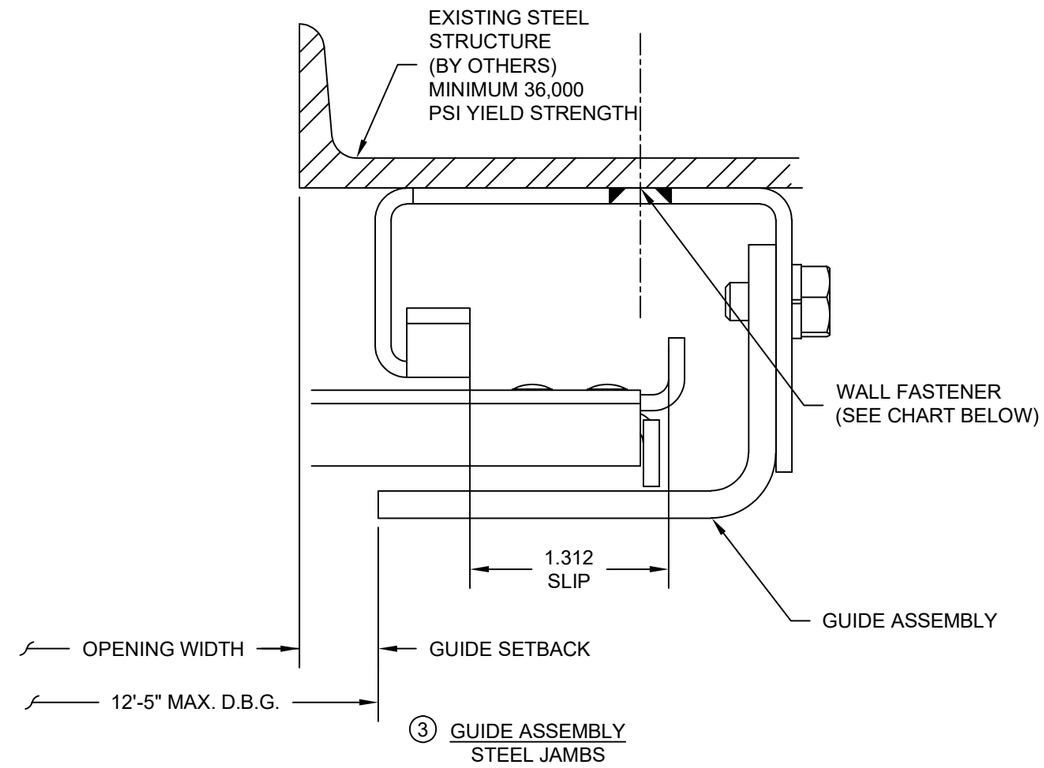

3 GUIDE ASSEMBLY
STEEL JAMBS

MAXIMUM CONCRETE FASTENER SPACING				
MIN. CONCRETE STRENGTH (psi)	ITW REDHEAD TRUBOLT (3 MIN. EMBED)	HILTI KWIK-BOLT TZ2 (2 MIN. EMBED)	HILTI KH-EZ (1 5/8 MIN. EMBED)	STAINLESS STEEL HILTI KH-EZ (2 MIN EMBED)
	2 1/4 MIN. EDGE DISTANCE	2 1/2 MIN. EDGE DISTANCE	1 1/2 MIN. EDGE DISTANCE	1 1/2 MIN. EDGE DISTANCE
4000	12	12	12	12

MAXIMUM FILLED CMU FASTENER SPACING			
MIN. JAMB STRENGTH (psi)	SIMPSON STRONG BOLT 2 (2 5/8 MIN. EMBED)	STAINLESS AND CARBON STEEL HILTI KWIK-BOLT TZ2 (1 7/8 MIN. EMBED)	STAINLESS AND CARBON STEEL HILTI KH-EZ (1 5/8 MIN. EMBEDMENT)
	4 MIN. EDGE DISTANCE	4 MIN. EDGE DISTANCE	4 MIN. EDGE DISTANCE
1500	8	8	8

STEEL FASTENER SPACING				
FASTENER	3/8-16 SCREW (THROUGH BOLTED)	3/8-16 SCREW (DRILLED & TAPPED)		1/8" FILLET WELD FULLY AROUND SLOT
MIN. JAMB MAT. THICK.	1/8	1/8	3/16	1/8
SPACING	12	8	12	12

SHAWN PATRICK KELLY
LICENSE
No 58299
STATE OF
FLORIDA
PROFESSIONAL ENGINEER

Clopay®

CLOPAY CORPORATION
8585 DUKE BOULEVARD
MASON, OH 45040

P: 800.225.6729
F: 513.440.4853

Unless otherwise specified, dimensions are in inches & tolerances are:

0.000 = +/- 0.031
FRACTIONAL = +/- 1/32
ANGLES = +/- 1/2 DEG

TITLE: WIND LOAD CONFIGURATION
ROLLING STEEL COUNTER DOOR
CP0005 SLAT IMPACT RATED

DRAWN BY:	SIZE:	SCALE:	SHEET:
KAD	B	AS NOTED	3/5

DWG NO: ES-16-132-CLO

REVIEWED FOR SPECIFIED DOOR COMPONENTS ONLY, EXISTING STRUCTURE NOT ANALYZED

L'TR	REVISION	DATE	BY	E.C.O.
*	ORIGINAL ISSUE	01/07/2025	KAD	2398

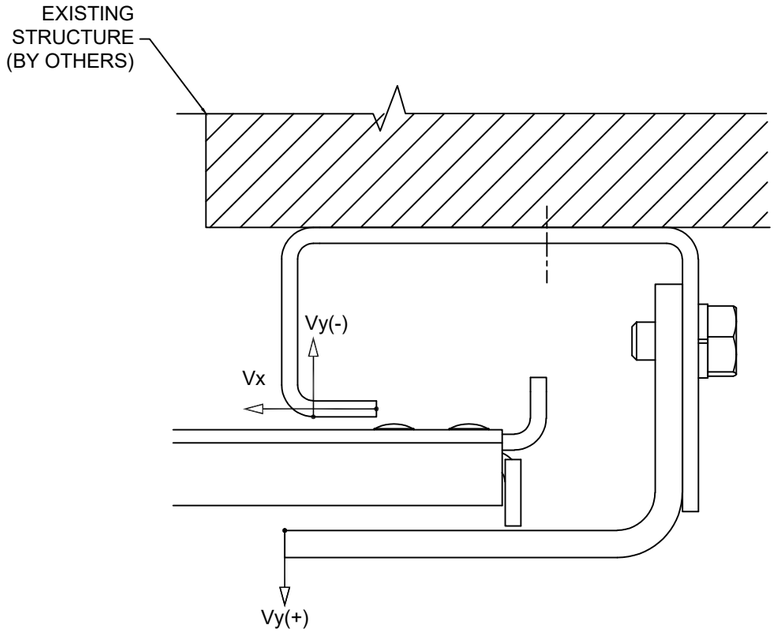

3 SUPERIMPOSED LOAD DIAGRAM

NOTE:
Vx & Vy ARE IN-PLANE AND OUT-OF-PLANE COMPONENTS OF THE REACTION, RESPECTIVELY, RESULTING FROM WIND LOADS ON THE ROLL-UP DOOR. THE EXISTING STRUCTURE SHALL BE CAPABLE OF RESISTING Vx & Vy FORCES SHOWN AND THE CORRESPONDING REACTIONS DUE TO THE ECCENTRICITIES OF THESE FORCES.

DESIGN AND/OR ANALYSIS OF EXISTING STRUCTURE(S) SHALL BE THE RESPONSIBILITY OF OTHERS.

UNREDUCED WIND FORCES ON BUILDING STRUCTURE (LBS/ FOOT OF HEIGHT)			
POSITIVE		NEGATIVE	
Vx	174	Vx	166
Vy	247	Vy	248

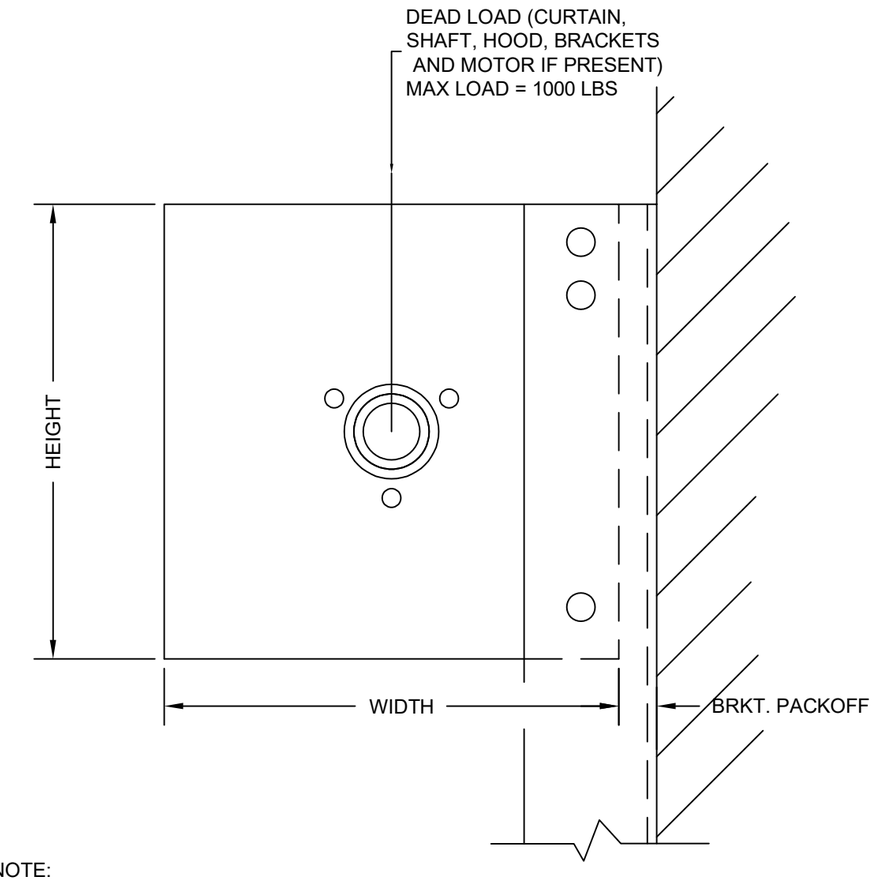

NOTE:
BRACKET HEIGHT AND WIDTH DIMENSION ARE TYPICALLY EQUAL TO COIL DIMENSION (14" MAXIMUM) ACUTAL DIMENSION MAY INCREASE BASED ON OPERATION METHOD OF DOOR.

SHAWN PATRICK KELLEY
LICENSE
No 58299
STATE OF FLORIDA
PROFESSIONAL ENGINEER

Clopay

CLOPAY CORPORATION
8585 DUKE BOULEVARD
MASON, OH 45040

P: 800.225.6729
F: 513.440.4853

Unless otherwise specified, dimensions are in inches & tolerances are:

0.000 = +/- 0.031
FRACTIONAL = +/- 1/32
ANGLES = +/- 1/2 DEG

TITLE: WIND LOAD CONFIGURATION
ROLLING STEEL COUNTER DOOR
CP0005 SLAT IMPACT RATED

DRAWN BY:	SIZE:	SCALE:	SHEET:
KAD	B	AS NOTED	4/5

DWG NO: ES-16-132-CLO

REVIEWED FOR SPECIFIED DOOR COMPONENTS ONLY, EXISTING STRUCTURE NOT ANALYZED

L'TR	REVISION	DATE	BY	E.C.O.
*	ORIGINAL ISSUE	01/07/2025	KAD	2398

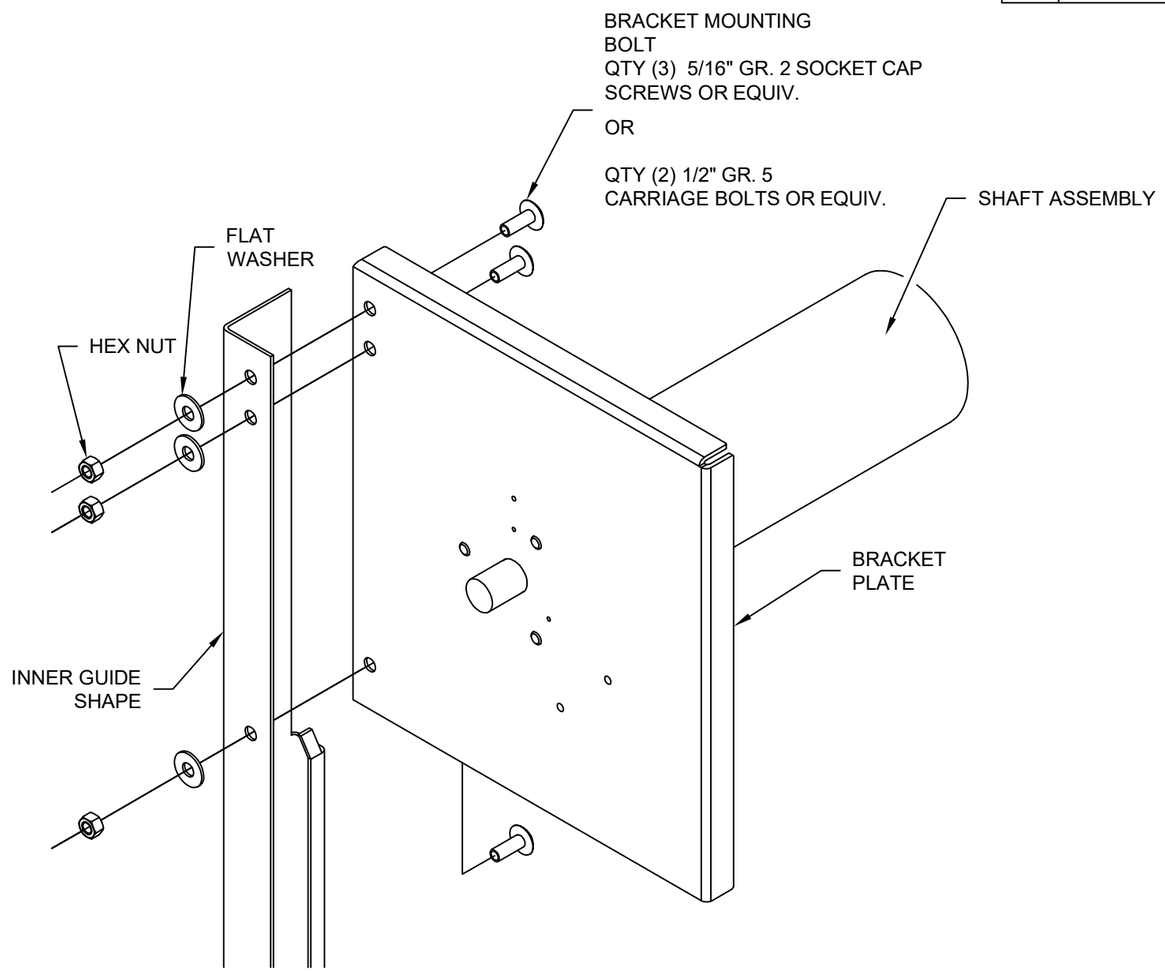

NOTE:
REPRESENTATIVE BRACKET MOUNTING SHOWN.
OTHER MOUNTING CONFIGURATIONS ARE AVAILABLE.

SHAWN PATRICK KELLEY
LICENSE
No 58299
STATE OF
FLORIDA
PROFESSIONAL ENGINEER

Clopay®

CLOPAY CORPORATION
8585 DUKE BOULEVARD
MASON, OH 45040

P: 800.225.6729
F: 513.440.4853

Unless otherwise specified, dimensions are in inches & tolerances are:

0.000 = +/- 0.031
FRACTIONAL = +/- 1/32
ANGLES = +/- 1/2 DEG

TITLE: WIND LOAD CONFIGURATION
ROLLING STEEL COUNTER DOOR
CP0005 SLAT IMPACT RATED

DRAWN BY:	SIZE:	SCALE:	SHEET:
KAD	B	AS NOTED	5/5

DWG NO: ES-16-132-CLO

REVIEWED FOR SPECIFIED DOOR COMPONENTS ONLY, EXISTING STRUCTURE NOT ANALYZED